2.5 Addition and Subtraction Properties

Lesson Objective *After studying this section, you will be able to:*

- *Apply the addition properties of segments and angles*
- *Apply the subtraction properties of segments and angles*

Recognizing when to use addition and subtraction properties can be easy as long as you look to see whether you are starting with

1) large angles or segments and ending with smaller
2) or the reverse.

Segment Congruence by Addition Property

Theorem 8: *If a segment is added to two congruent segments, the sums are congruent.*

Theorem 10: *If congruent segments are added to congruent segments then their sums are congruent.*

Example: Suppose you are given: AD ≅ EC and BD ≅ BE ..... conclusion: ?

Then ***AB ≅ BC*** *(by addition property of segments)*

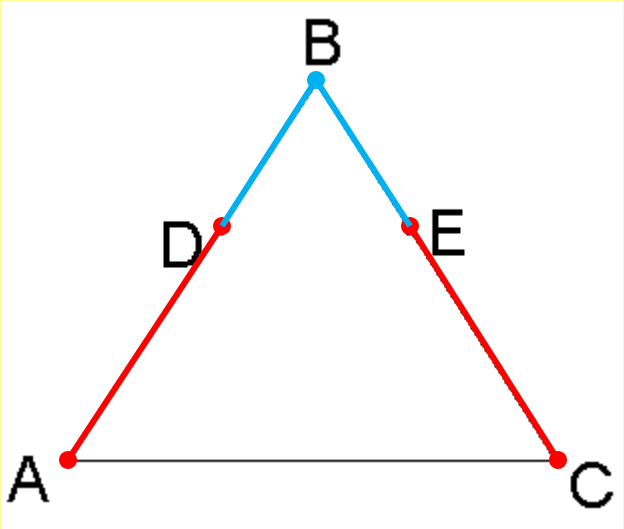

The Addition Properties work in a similar way for *ANGLES*:

Theorem 9: *If an angle is added to two congruent angles, the sums are congruent.*

Theorem 11: *If congruent angles are added to congruent angles, the sums are congruent.*

Example:

(Think . . .) If two pair of adjacent congruent angles are added together then the resulting angles must be congruent.

$\angle BAE \cong \angle BCD$ and $\angle EAC \cong \angle DCA$ then $\angle BAC \cong \angle BCA$

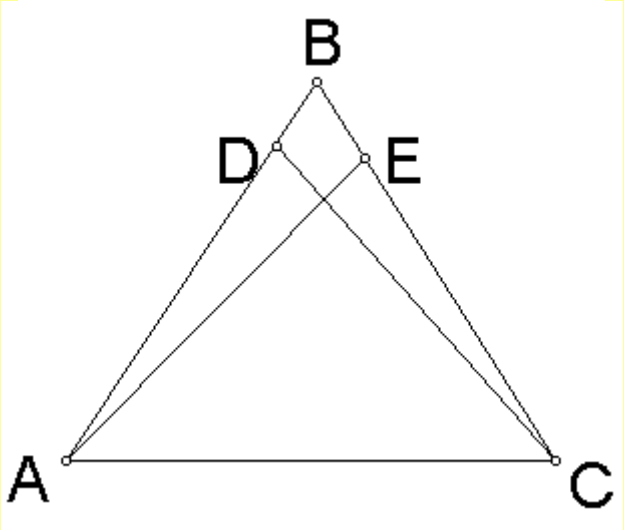

Subtraction is the reverse process.

(Think . . .) If you start with two large congruent angles and subtract away two smaller congruent angles, the measures you are left with will be congruent.

Again, using the picture above but with subtraction in mind:

$\angle BAC \cong \angle BCA$ and $\angle EAC \cong \angle DCA$ then $\angle BAE \cong \angle BCD$

Notice that: $\angle BAC - \angle EAC = \angle BAE$ and $\angle BCA - \angle DCA = \angle BCD$

Theorem 12: *If a segment (or angle) is subtracted from congruent segments (or angles), the differences are congruent.*

Theorem 13: *If congruent segments (or angles) are subtracted from congruent segments (or angles), the differences are congruent.*

Sometimes you are adding the same segment or angle to both pieces.

Example of adding the same ANGLE:

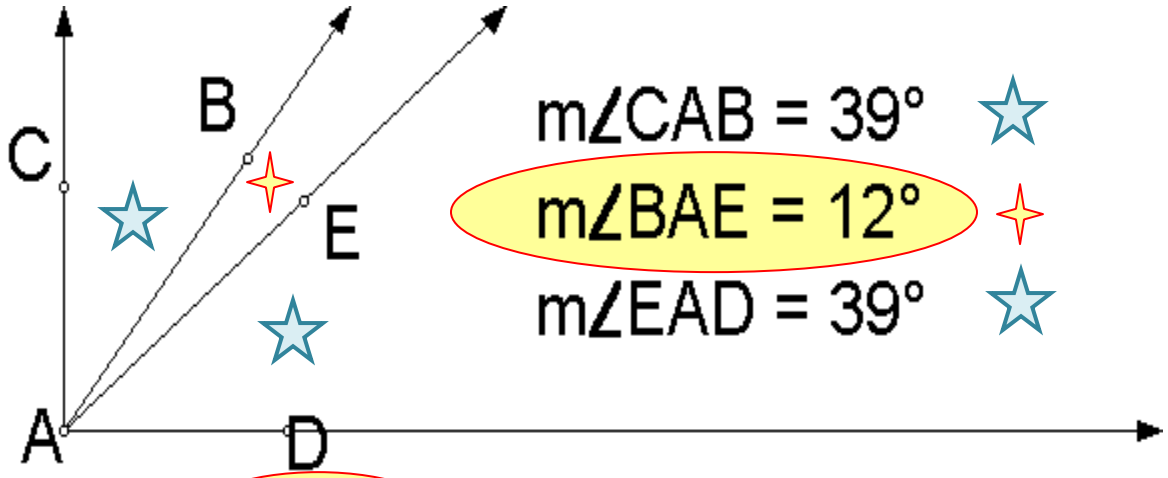

$m\angle CAB = 39°$

$m\angle BAE = 12°$

$m\angle EAD = 39°$

$m\angle CAB + m\angle BAE = 51°$ $\quad$ $m\angle CAE = 51°$

$m\angle EAD + m\angle BAE = 51°$ $\quad$ $m\angle BAD = 51°$

Since ***∡BAE*** (✦) *is being added to two angles that were said to be congruent in the first place(* ☆ *) , the resulting angles after the addition are also congruent.*

Using the Addition and Subtraction Properties in Proofs:

1. An <u>*addition*</u> property is used whenever the resulting segments (or angles) are ***greater*** than what was given.

2. A <u>*subtraction*</u> property was used whenever the resulting segments (or angles) are ***smaller*** than those that were given.

Flowchart Example:

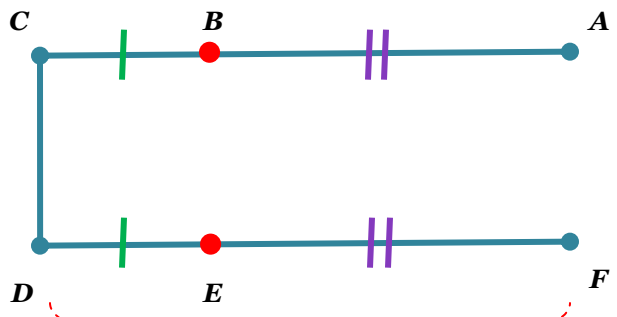

Given: $\overline{AB} \cong \overline{FE}$,
$\overline{BC} \cong \overline{ED}$

Prove: $\overline{AC} \cong \overline{FD}$

Given #1
(small purple segs)

$\overline{AB} \cong \overline{FE}$

Given #2
(small green segs)

$\overline{BC} \cong \overline{ED}$

Addition Property
*(**larger** than the givens)*

$\overline{AC} \cong \overline{FD}$